Protran® PR3920

Subsea Differential Pressure Transmitter

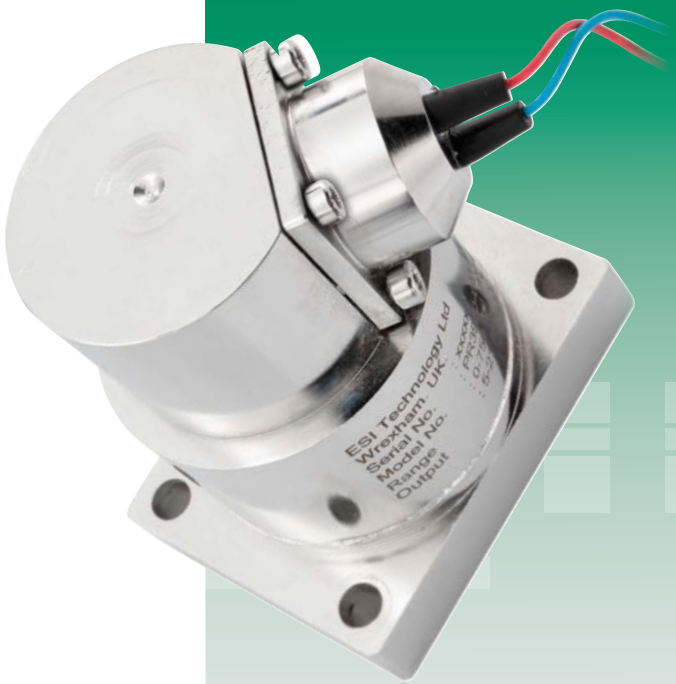

- Silicon-on-Sapphire sensor technology for outstanding performance
- Standard sensing range 0-50 bar DP
- 690 bar line pressure
- 1,200 bar secondary containment
- Submersion to 3,000 metres sea level
- High accuracy option
- NACE corrosion resistance
- Hyperbaric testing and Environmental Stress Screening (ESS Testing)
- ATEX/IECEx option available (includes M1 for mining applications)

RoHS 2011/65/EU

Vers. 20/1/Eng

Protran® PR3920 Subsea Differential Pressure Transmitter

Description

The PR3920 differential pressure transmitter provides very accurate low pressure wet-wet differential pressure measurement on extremely high line pressure sources. Designed for permanent installation in very demanding subsea applications the housing is completely sealed to resist 300 bar external pressure. Intended for submersion in pressurised dielectric oil with seawater for monitoring of subsea well control valves or hydraulic pressure measurement.

The unique Silicon-on-Sapphire sensor technology provides outstanding performance and gives excellent stability over a wide temperature range. The advanced sensor design consists of a piezoresistive silicon strain gauge circuit, which is epitaxially grown onto the surface of a sapphire diaphragm to form a single crystalline structure. The sapphire sensor element is then molecularly bonded to a titanium alloy sub-diaphragm. This enables the sensor to endure higher over- pressures and provides superb corrosion resistance. The sensor exhibits virtually no hysteresis and excellent long-term stability. With outstanding insulation properties, the sapphire substrate allows the sensor to operate over a very wide temperature range without loss of performance.

The PR3920 pressure transmitter provides surface mounting with a stainless steel mounting plate and dual redundant o-ring face seals. Both the high and low pressure ports can withstand 1,000bar overpressure with no damage or loss of performance. The titanium alloy wetted parts provide conformance to NACE corrosion resistance requirements. Electrical connection is via a heavy duty PTFE cable with optional angle of orientation. Output signal is a 4-20 mA, 2 wire current loop which can be powered from and external 10-36 Vdc supply. Application includes control of chemical injection for sub-sea wells for oil and gas extraction.

An optional ATEX and IECEx approved version of this product is available for explosion protection for flammable gases (zone 0), dusts (zone 20) and mining areas (group I M1).

Dimensions
(in mm)

ELECTRICAL CONNECTION	
Colour	**Function**
Red	Supply (10-36Vdc)
Blue	Signal (4-20mA)

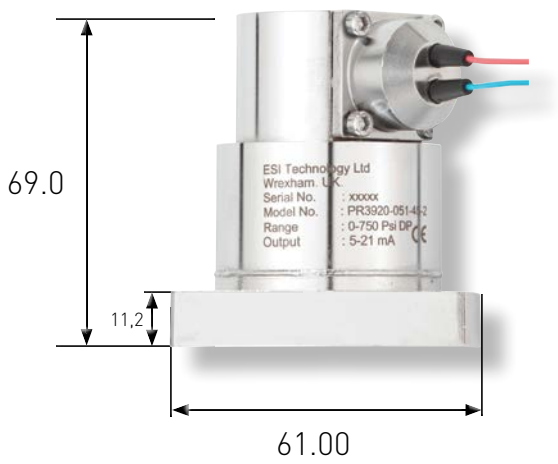

Technical Data

Type	PR3920
Sensor Technology:	Silicon-on-Sapphire (SoS)
Output Signal:	4-20 mA (2 wire)
Supply Voltage:	10-36 VDC
Pressure Reference:	Differential Sealed Gauge
Protection of Supply Voltage:	Protected against supply voltage reversal up to 50 V
Differential Pressure Range:	0-750psi (51 barDP)
Overpressure Safety:	1.5x maximum static line pressure for all ranges
Secondary Pressure Containment:	1,200 bar max
Common Mode (Static line pressure):	To both ports simultaneously 690bar with less than 1%FS change on output signal.
Load Driving Capability:	4 – 20 mA: RL < [UB - 10 V] / 20 mA; (e.g. with supply voltage (UB) of 36V, max. load (RL) is 1300 Ω)
Accuracy NLHR:	≤ ±0.25 % of span BFSL
Zero Offset and Span Tolerance:	±0.20 mA
Operating Ambient Temperature:	-10°C to +70°C (+14 °F to +158 °F)
Operating Media Temperature:	-10°C to +70°C (+14 °F to +158 °F)
Storage Temperature:	+5 °C to +40 °C (+41 °F to +104°F) Recommended Best Practice
Temperature Effects:	±3.0% FS total error band for -20°C – +70°C. Typical thermal zero and span coefficients ±0.05% FS/ °C
ATEX/IECEx Approval Option:	Ex II 1 G Ex ia IIC T4 Ga (zone 0) Ex II 1 D Ex ia IIIC T135°C Da (zone 20) Ex I M 1 Ex ia I Ma (group 1 M1)
ATEX/IECEx Safety Values:	Ui = 28 V Ii = 119 mA Pi = 0.65 W Li = 0.1 µH Ci = 74 nF Temperature Range = -20°C – +70°C Max. cable length = 45 m
Electromagnetic Compatibility:	Emissions: EN61000-6-4; Immunity: EN61000-6-2; Certification: CE Marked
Insulation Resistance:	> 1GΩ @ 50 VDC
Response time 10-90 %:	1 mS
Operating Environment:	Sealed for immersion in pressurised dielectric fluid up to 300bar and for short periods in seawater.
Wetted Parts:	SAE 316 stainless steel and titanium alloy
Pressure Media:	All fluids compatible with SAE 316 stainless steel and titanium alloy
Corrosion Resistance:	NACE compliant materials
Pressure Connection:	Face sealing mounting plate with dual redundant elastomeric O ring seals on both pressure ports.
Electrical Connection:	Raychem wire (optional cable outlet orientation available on request)
Net. Weight (Kg):	Subject to specification

DISCLAIMER : ESI Technology Ltd operates a policy of continuous product development. We reserve the right to change specification without prior notice. All products manufactured by ESI Technology Ltd are calibrated using precision calibration equipment, traceable to national measurement standards.

t. +44(0)1978 262 255
e. sales@esi-tec.com
www.esi-tec.com

SUCO GROUP WORLDWIDE

Protran PR3915

Dual Redundant Subsea Pressure Transmitter

- Two pressure sensors and electronics for reliable dual redundancy
- Silicon-on-Sapphire sensor technology for outstanding performance
- Submersion to 3,000 metres sea level
- Pressure ranges available to 1,000 bar
- High accuracy option
- Hyperbaric testing to 3,300 metres depth
- Environmental Stress Screening (ESS Testing)

RoHS 2011/65/EU

Vers. 20/1/Eng

Protran® PR3915 Dual Redundant Subsea Pressure Transmitter

Description

The PR3915 Dual Redundant Subsea pressure transmitter has been designed to meet the requirements of the sub-sea oil industry Valve-Mountable and is configured to mount directly to the industry standard control valve flange arrangement.

The unique Silicon-on-Sapphire sensor technology provides outstanding performance and gives excellent stability over a wide temperature range. The advanced sensor design consists of a piezoresistive silicon strain gauge circuit, which is epitaxially grown onto the surface of a sapphire diaphragm to form a single crystalline structure. The sapphire sensor element is then molecularly bonded to a titanium alloy sub-diaphragm. This enables the sensor to endure higher over-pressures and provides superb corrosion resistance. The sensor exhibits virtually no hysteresis and excellent long-term stability. With outstanding insulation properties, the sapphire substrate allows the sensor to operate over a very wide temperature range without loss of performance.

Housed in fully welded body with wetted parts conforming to the NACE recommendation for material corrosion resistance, this product will provide a durable solution for long term accurate pressure measurement even when permanently situated in extreme depth sub-sea environments. The pressure connection is achieved with an 8mm diameter stem with integral dual redundant o-ring seal grooves. Optional connections are available. Alternative connections are available. The fitting is constructed from Inconel 625 for high chemical resistance. Providing a two wire output signal of 4-20 mA with high stability and repeatability for pressure ranges up to 1,000 bar. Intended for permanent immersion in pressurised dielectic oil and protected from ingress with a high pressure glass-to-metal lead through the product can withstand external pressure up to 3,000 metres depth water and provides secondary pressure containment up to 1,650 bar. Units can be supplied with hyperbaric test certificates to 3,000metres water submersion. Electrical connection is via strong PTFE Raychem Flexlite leads. Pressure ranges available from 0-200 bar to 0-1,000 bar.

Dimensions
(in mm)

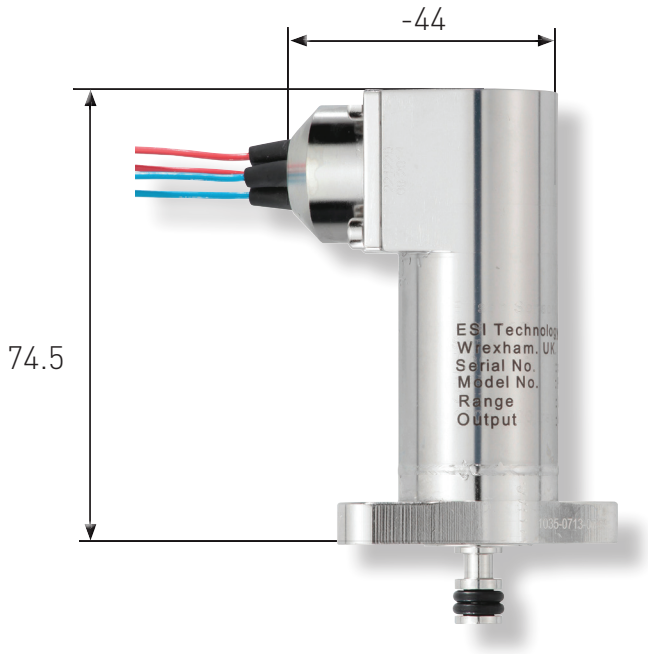

Technical Data

Type	PR3915
Sensor Technology:	Silicon-on-Sapphire (SoS)
Output Signal:	4 – 20 mA (2 wire)
Supply Voltage:	10 – 36 VDC
Pressure Reference:	Sealed gauge
Protection of Supply Voltage:	Protected against supply voltage reversal up to 50 V
Standard Pressure Ranges:	0 – 569 bar; 0 – 759 bar; 0 – 1,035 bar; 0-1,380 bar (other options available)
Overpressure Safety:	2x for ranges up to 759 bar; 1.5x for 1,035 bar
Load Driving Capability:	4 – 20 mA: RL < [UB - 10 V] / 20 mA (e.g. with supply voltage (UB) of 36V, max. load (RL) is 1300 Ω)
Accuracy NLHR:	≤ ±0.25 % of span BFSL
Zero Offset and Span Tolerance:	±0.10mA
Operating Ambient Temperature:	-20°C to +40°C (-4 °F to +104 °F)
Operating Media Temperature:	-20°C to +40°C (-4 °F to +104 °F)
Storage Temperature:	+5 °C to +40 °C (+41 °F to +104°F) Recommended Best Practice
Temperature Effects:	±0.015%fs total error band for -20° to +40°C; Typical thermal zero and span coefficients ±0.005%FS/°C.
ATEX/IECEx Approval Option:	Ex II 1 G Ex ia IIC T4 Ga (zone 0) Ex II 1 D Ex ia IIIC T135 °C Da (zone 20) Ex I M 1 Ex ia I Ma (group 1 M1)
ATEX/IECEx Safety Values:	Ui = 28 V Ii = 119 mA Pi = 0.65 W Li = 0.1 µH Ci = 74 nF Temperature Range = -20 °C to +70 °C Max. cable length = 45 m
Ingress Protection:	Fully welded housing. Rated IP67 when correctly installed to conduit connection.
Electromagnetic Compatibility:	Emissions: EN61000-6-4; Immunity: EN61000-6-2; Certification: CE Marked
Insulation Resistance:	> 500 MΩ @ 50 VDC
Response time 10-90 %:	1 mS
Wetted Parts:	SAE 316 stainless steel with titanium alloy measurement cell
Pressure Media:	All fluids compatible with SAE 316 stainless steel and titanium alloy
Pressure Connection:	Many specialised pressure connection options available to suit individual requirements. Contact the sales team for more information.
Electrical Connection:	Cable outlet or Subsea connector options available
Net. Weight (Kg):	Subject to specification

DISCLAIMER : ESI Technology Ltd operates a policy of continuous product development. We reserve the right to change specification without prior notice. All products manufactured by ESI Technology Ltd are calibrated using precision calibration equipment, traceable to national measurement standards.

t. +44(0)1978 262 255
e. sales@esi-tec.com
www.esi-tec.com

Protran® PR3914

Subsea Pressure Transmitter

- Suitable for ROV and deep sea test equipment
- Silicon-on-Sapphire sensor technology for outstanding performance
- Submersion to 6,000 mtrs depth
- Pressure ranges available to 2,000 bar
- High accuracy option
- Optional temperature output
- Hyperbaric testing and Environmental Stress Screening (ESS Testing)

RoHS 2011/65/EU

SILICON-ON-SAPPHIRE TECHNOLOGY SOS

CE

Vers. 20/1/Eng

Protran® PR3914 Subsea Pressure Transmitter

Description

The PR3914 subsea pressure transmitter has been designed to meet the demanding requirements of pressure measurement at deep levels of immersion especially in oil industry applications. It can be configured to suit a multitude of applications

The unique Silicon-on-Sapphire sensor technology provides outstanding performance and gives excellent stability over a wide temperature range. The advanced sensor design consists of a piezoresistive silicon strain gauge circuit, which is epitaxially grown onto the surface of a sapphire diaphragm to form a single crystalline structure. The sapphire sensor element is then molecularly bonded to a titanium alloy sub-diaphragm. This enables the sensor to endure higher over-pressures and provides superb corrosion resistance. The sensor exhibits virtually no hysteresis and excellent long-term stability. With outstanding insulation properties, the sapphire substrate allows the sensor to operate over a very wide temperature range without loss of performance.

Housed in fully welded body with wetted parts conforming to the NACE recommendation for material corrosion resistance, this product will provide a durable solution for long-term accurate pressure measurement even when permanently situated in extreme depth sub-sea environments. Multiple optional connections are available... Providing a two wire output signal of 4-20 mA with high stability and repeatability for pressure ranges up to 2,000 bar. Intended for permanent immersion the product can withstand external pressures of up to 6,000 metres depth water. Secondary provides secondary pressure containment up to 1,650 bar. Units can be supplied with hyperbaric test certificates to 3,000 metres water submersion. Electrical connection is via strong PTFE Raychem Flexlite leads. Pressure ranges available from 0-200 bar to 0-1,000bar.

Dimensions
(in mm)

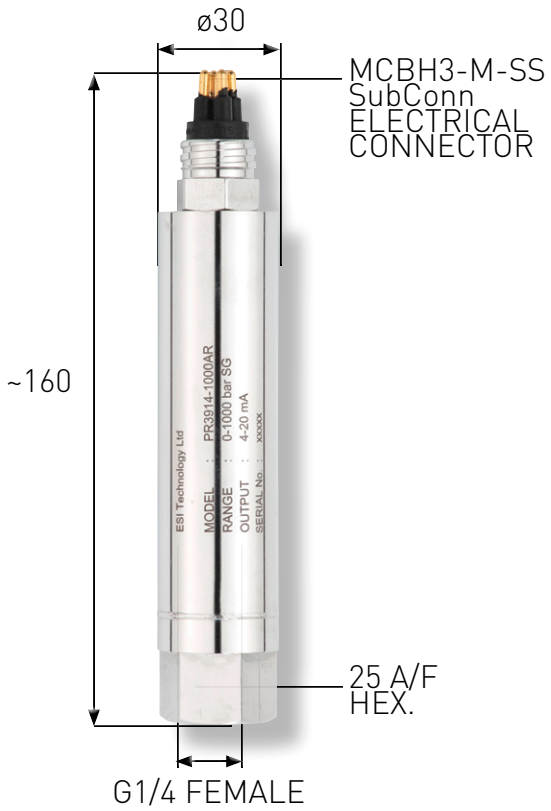

Technical Data

Type:	PR3914
Sensor Technology:	Silicon-on-Sapphire (SoS)
Output Signal:	4 – 20 mA (2 wire)
Supply Voltage:	10 – 36 VDC
Pressure Reference:	Sealed gauge
Protection of Supply Voltage:	Protected against supply voltage reversal up to 50 V
Standard Pressure Ranges:	Typical ranges from 0-10 bar to 0-2,000 bar. Contact the sales office for further information.
Overpressure Safety:	Contact the sales office for further information.
Load Driving Capability:	4 – 20 mA: RL < [UB - 10 V] / 20 mA (e.g. with supply voltage (UB) of 36V, max. load (RL) is 1300 Ω)
Accuracy NLHR:	≤ ±0.25 % of span BFSL
Zero Offset and Span Tolerance:	±0.10mA
Operating Ambient Temperature:	-20°C to +40°C (-4 °F to +104 °F)
Operating Media Temperature:	-20°C to +40°C (-4 °F to +104 °F)
Storage Temperature:	+5 °C to +40 °C (+41 °F to +104°F) Recommended Best Practice
Temperature Effects:	±0.015%fs total error band for -20° to +40°C; Typical thermal zero and span coefficients ±0.005%FS/°C.
Ingress Protection:	Fully welded housing. Rated IP68 when correctly installed to conduit connection.
Electromagnetic Compatibility:	Emissions: EN61000-6-4; Immunity: EN61000-6-2; Certification: CE Marked
Insulation Resistance:	> 100 MΩ @ 50 VDC
Response time 10-90 %:	1 mS
Wetted Parts:	SAE 316 stainless steel housing with titanium alloy measurement cell (other materials on request)
Pressure Media:	All fluids compatible with SAE 316 stainless steel and titanium alloy
Pressure Connection:	Many specialised pressure connection options available to suit individual requirements. Contact the sales team for more information.
Electrical Connection:	Cable outlet or Subsea connector options available
Related product	PT100 temperature transducer PR3919 also available. Contact Sales for details
Net. Weight (Kg):	Subject to specification

DISCLAIMER : ESI Technology Ltd operates a policy of continuous product development. We reserve the right to change specification without prior notice. All products manufactured by ESI Technology Ltd are calibrated using precision calibration equipment, traceable to national measurement standards.

Protran PR3913

Control Valve Pressure Transmitter

- Silicon-on-Sapphire sensor technology for outstanding performance
- Submersion to 3,000 mtrs sea level
- Pressure ranges available to 1,000 bar
- High accuracy option
- Hyperbaric testing to 3,300 m depth
- Environmental Stress Screening (ESS Testing)
- Suitable for ROV and deep sea test equipment
- Comprehensive documentation package and certification
- ATEX/IECEx option available (includes M1 for mining applications)

RoHS 2011/65/EU

SILICON-ON-SAPPHIRE TECHNOLOGY

Vers. 20/1/Eng

Description

The PR3913 Valve-Mountable pressure transmitter has been designed to meet the requirements of the sub-sea oil industry and is configured to mount directly to the industry standard control valve flange arrangement.

The unique Silicon-on-Sapphire sensor technology provides outstanding performance and gives excellent stability over a wide temperature range. The advanced sensor design consists of a piezoresistive silicon strain gauge circuit, which is epitaxially grown onto the surface of a sapphire diaphragm to form a single crystalline structure. The sapphire sensor element is then molecularly bonded to a titanium alloy sub-diaphragm. This enables the sensor to endure higher over-pressures and provides superb corrosion resistance. The sensor exhibits virtually no hysteresis and excellent long-term stability. With outstanding insulation properties, the sapphire substrate allows the sensor to operate over a very wide temperature range without loss of performance.

Housed in fully welded body with wetted parts conforming to the NACE recommendation for material corrosion resistance, this product will provide a durable solution for long term accurate pressure measurement even when permanently situated in extreme depth sub-sea environments. The pressure connection is achieved with an 8mm diameter stem with integral dual redundant o-ring seal grooves. The fitting is constructed from Inconel 625 for high chemical resistance. Providing a two wire output signal of 4-20 mA with high stability and repeatability for pressure ranges up to 1,000 bar. Intended for permanent immersion in pressurised dielectic oil and protected from ingress with a high pressure glass-to-metal lead through the product can withstand external pressure up to 3,000 metres depth water and provides secondary pressure containment up to 1,650 bar. Units can be supplied with hyperbaric test certificates to 3,000 metres water submersion. Electrical connection is via strong PTFE Raychem Flexlite leads. Pressure ranges available from 0-200 bar to 0-1,000 bar.

An optional ATEX and IECEx approved version of this product is available for explosion protection for flammable gases (zone 0), dusts (zone 20) and mining areas (group I M1).

Dimensions
(in mm)

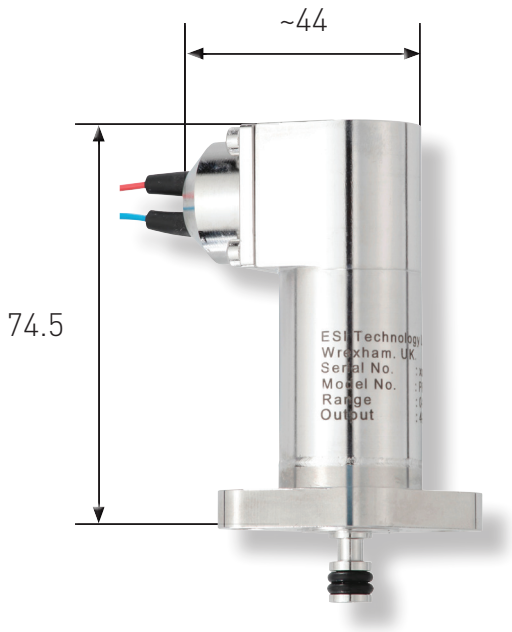

ELECTRICAL CONNECTION (mA)	
Red	Supply (10-36Vdc)
Blue	Signal (4-20mA)

Technical Data

Type:	PR3913
Sensor Technology:	Silicon-on-Sapphire (SoS)
Output Signal:	4 – 20 mA (2 wire)
Supply Voltage:	10 – 36 VDC
Pressure Reference:	Sealed gauge
Protection of Supply Voltage:	Protected against supply voltage reversal up to 50 V
Standard Pressure Ranges (bar):	0 – 228 bar; 0 – 379 bar; 0 – 569 bar; 0 – 759 bar; 0 – 1,035 bar (other options available)
Standard Pressure Ranges (psi):	0-3,000 psi; 0-5,000 psi; 0-8,000 psi; 0-11,000 psi; 0-15,000 psi (other options available)
Overpressure Safety:	2x for ranges up to 759 bar; 1.5x for 1,035 bar
Load Driving Capability:	4 – 20 mA: RL < [UB - 10 V] / 20 mA; (e.g. with supply voltage (UB) of 36 V, max. load (RL) is 1300 Ω)
Accuracy NLHR:	≤ ±0.25 % of span BFSL
Zero Offset and Span Tolerance:	±0.10 mA
Operating Ambient Temperature:	-20°C to +40°C (-4 °F to +104 °F)
Operating Media Temperature:	-20°C to +40°C (-4 °F to +104 °F)
Storage Temperature:	+5 °C to +40 °C (+41 °F to +104°F) Recommended Best Practice
Temperature Effects:	±0.015%fs total error band for -20 °C to +40 °C; span coefficients ±0.005%FS/°C.
ATEX/IECEx Approval:	Ex II 1 G Ex ia IIC T4 Ga (zone 0) Ex II 1 D Ex ia IIIC T135 °C Da (zone 20) Ex I M 1 Ex ia I Ma (group 1 M1)
ATEX/IECEx Safety Values:	Ui = 28 V Ii = 119 mA Pi = 0.65 W Li = 0.1 µH Ci = 74 nF Temperature Range = -20 °C to +70 °C Max. cable length = 45 m
Ingress Protection:	Fully welded housing. Rated IP67 when correctly installed to conduit connection.
Electromagnetic Capability:	Emissions: EN61000-6-4; Immunity: EN61000-6-2; Certification: CE Marked
Insulation Resistance:	> 500 MΩ @ 50 VDC
Response time 10-90 %:	1 mS
Wetted Parts:	Inconel 625 with titanium alloy measurement cell
Pressure Media:	All fluids compatible with Inconel 625 and titanium alloy
Pressure Connection:	Many specialised pressure connection options available to suit individual requirements. Contact the sales team for more information.
Electrical Connection:	Cable outlet or Subsea connector options available
Net. Weight (Kg):	Subject to specification

DISCLAIMER : ESI Technology Ltd operates a policy of continuous product development. We reserve the right to change specification without prior notice. All products manufactured by ESI Technology Ltd are calibrated using precision calibration equipment, traceable to national measurement standards.

t. +44(0)1978 262 255
e. sales@esi-tec.com
www.esi-tec.com

SUCO GROUP WORLDWIDE