TK 55 — 52 x 50 mm

Base and cover: **Polycarbonate**, grey, similar to RAL 7035

Enclosure type	Height	Order No.
TK PC 55-4-m	35	127 455 01
TK PC 55-4-o	35	120 455 01

Base and cover: **Polycarbonate**, grey, similar to RAL 7035

Enclosure type	Height	Order No.
TK PC 55-4-v	35	129 455 01
sealing area/mm: 5-10		

Base: **Polycarbonate**, grey, similar to RAL 7035
Cover: **Polycarbonate**, transparent

Enclosure type	Height	Order No.
TK PC 55-4-tm	35	137 455 01
TK PC 55-4-to	35	130 455 01

Base: **Polycarbonate**, grey, similar to RAL 7035
Cover: **Polycarbonate**, transparent

Enclosure type	Height	Order No.
TK PC 55-4-tv	35	139 455 01
Dichtber./mm: 5-10		

TK 75 — 65 x 50 mm

Base and cover **Polycarbonate**, grey, similar to RAL 7035

Enclosure type	Height	Order No.
TK PC 75-4-m	35	127 475 01
TK PC 75-4-o	35	120 475 01

Base and cover: **Polycarbonate**, grey, similar to RAL 7035

Enclosure type	Height	Order No.
TK PC 75-4-v	35	129 475 01
TK PC 75-4-2v	35	128 475 01
sealing area/mm: 5-10		

Base: **Polycarbonate**, grey, similar to RAL 7035
Cover: **Polycarbonate**, transparent

Enclosure type	Height	Order No.
TK PC 75-4-tm	35	137 475 01
TK PC 75-4-to	35	130 475 01

Base: **Polycarbonate**, grey, similar to RAL 7035
Cover: **Polycarbonate**, transparent

Enclosure type	Height	Order No.
TK PC 75-4-tv	35	139 475 01
TK PC 75-4-2tv	35	138 475 01
sealing area/mm: 5-10		

TK 77 — 65 x 65 mm

Base and cover: **Polystyrene**, grey, similar to RAL 7035

Enclosure type	Height	Order No.
TK PS 77-6-m	57	105 401 01
TK PS 77-8-m	81	105 901 01
TK PS 77-6-o	57	110 401 01
TK PS 77-8-o	81	110 901 01

Base and cover: **Polycarbonate**, grey, similar to RAL 7035

Enclosure type	Height	Order No.
TK PC 77-6-m	57	127 401 01
TK PC 77-8-m	81	127 901 01

Base: **Polystyrene**, grey, similar to RAL 7035
Cover: **Polycarbonate**, transparent

Enclosure type	Height	Order No.
TK PS 77-6-tm	57	106 001 01
TK PS 77-8-tm	81	106 501 01
TK PS 77-6-to	57	111 001 01
TK PS 77-8-to	81	111 501 01

also available in aluminium, see page 170

Base: **Polycarbonate**, grey, similar to RAL 7035
Cover: **Polycarbonate**, transparent

Enclosure type	Height	Order No.
TK PC 77-6-tm	57	137 001 01
TK PC 77-8-tm	81	137 501 01

With knockouts

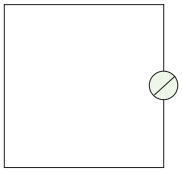

Metric types
⊘ = M 12/16

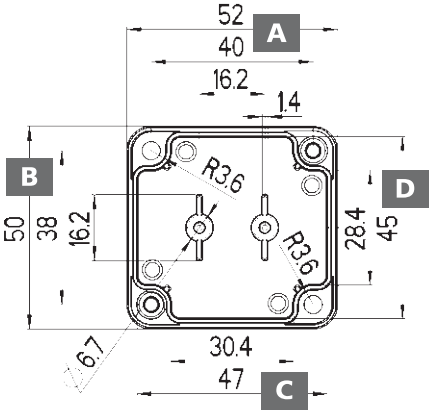

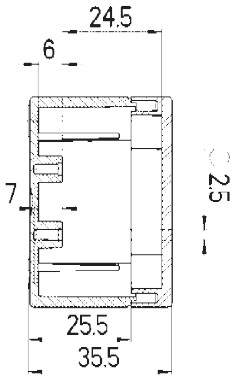

Without knockouts

Maximum possible through openings per box side

M	12	16	20	25	32	40	50
A/C	1	1	-	-	-	-	-
B/D	1	1	-	-	-	-	-

With knockouts

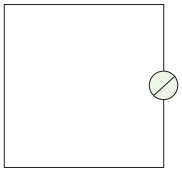

Metric types
⊘ = M 12/16

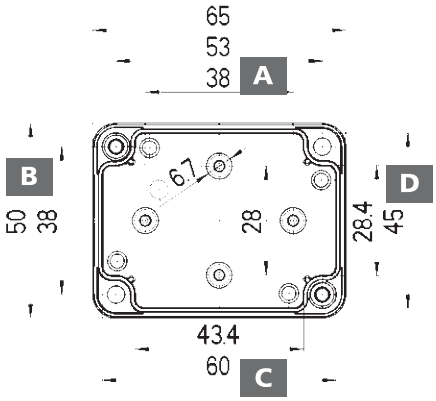

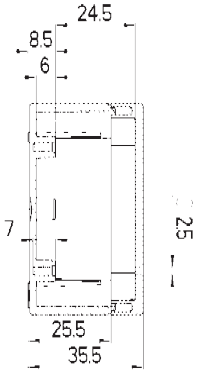

Without knockouts

Maximum possible through openings per box side

M	12	16	20	25	32	40	50
A/C	2	1	-	-	-	-	-
B/D	1	1	-	-	-	-	-

With knockouts

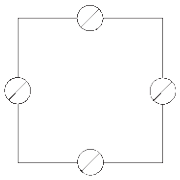

Metric types
⊘ = M 16/20

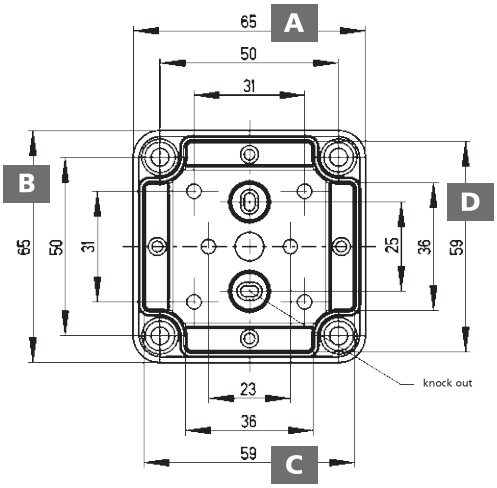

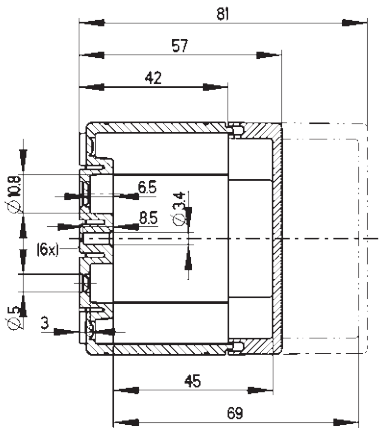

Without knockouts

Maximum possible through openings per box side

M	12	16	20	25	32	40	50
A/C	2	1	1	-	-	-	-
B/D	2	1	1	-	-	-	-

TK 97 94 x 65 mm

Base and cover: **Polystyrene**, grey, similar to RAL 7035

Enclosure type	Height	Order No.
TK PS 97-6-m	57	105 402 01
TK PS 97-8-m	81	105 902 01
TK PS 97-6-o	57	110 402 01
TK PS 97-8-o	81	110 902 01

Base and cover: **Polycarbonate**, grey, similar to RAL 7035

Enclosure type	Height	Order No.
TK PC 97-6-m	57	127 402 01
TK PC 97-8-m	81	127 902 01

Base: **Polystyrene**, grey, similar to RAL 7035
Cover: **Polycarbonate**, transparent

Enclosure type	Height	Order No.
TK PS 97-6-tm	57	106 002 01
TK PS 97-8-tm	81	106 502 01
TK PS 97-6-to	57	111 002 01
TK PS 97-8-to	81	111 502 01

Base: **Polycarbonate**, grey, similar to RAL 7035
Cover: **Polycarbonate**, transparent

Enclosure type	Height	Order No.
TK PC 97-6-tm	57	137 002 01
TK PC 97-8-tm	81	137 502 01

TK 99 94 x 94 mm

Base and cover: **Polystyrene**, grey, similar to RAL 7035

Enclosure type	Height	Order No.
TK PS 99-6-m	57	105 403 01
TK PS 99-8-m	81	105 903 01
TK PS 99-6-o	57	110 403 01
TK PS 99-8-o	81	110 903 01

Base and cover: **Polycarbonate**, grey, similar to RAL 7035

Enclosure type	Height	Order No.
TK PC 99-6-m	57	127 403 01
TK PC 99-8-m	81	127 903 01

Base: **Polystyrene**, grey, similar to RAL 7035
Cover: **Polycarbonate**, transparent

Enclosure type	Height	Order No.
TK PS 99-6-tm	57	106 003 01
TK PS 99-8-tm	81	106 503 01
TK PS 99-6-to	57	111 003 01
TK PS 99-8-to	81	111 503 01

also available in aluminium, see page 170

Base: **Polycarbonate**, grey, similar to RAL 7035
Cover: **Polycarbonate**, transparent

Enclosure type	Height	Order No.
TK PC 99-6-tm	57	137 003 01
TK PC 99-8-tm	81	137 503 01

With knockouts

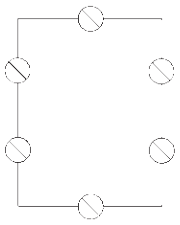

Metric types
⊘ = M 16/20

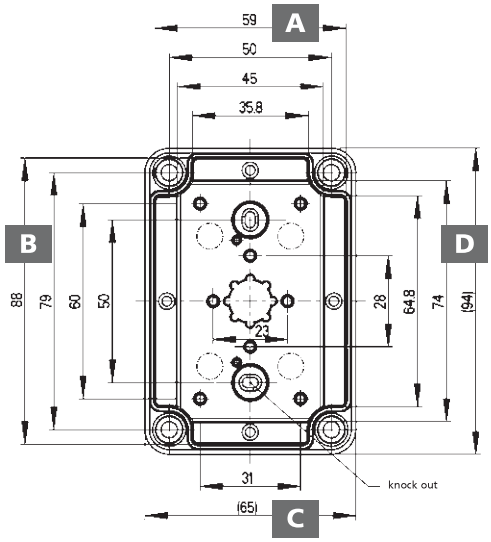

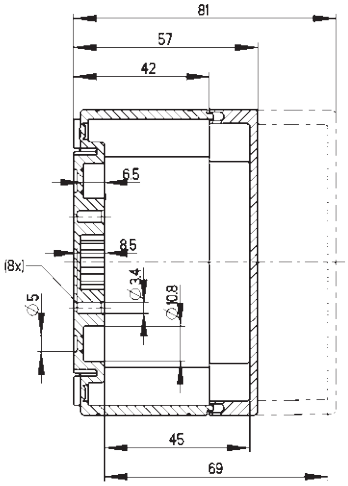

Without knockouts

Maximum possible through openings per box side

M	12	16	20	25	32	40	50
A/C	2	1	1	1	-	-	-
B/D	3	2	2	1	-	-	-

With knockouts

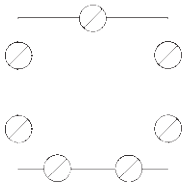

Metric types
⊘ = M 16/20

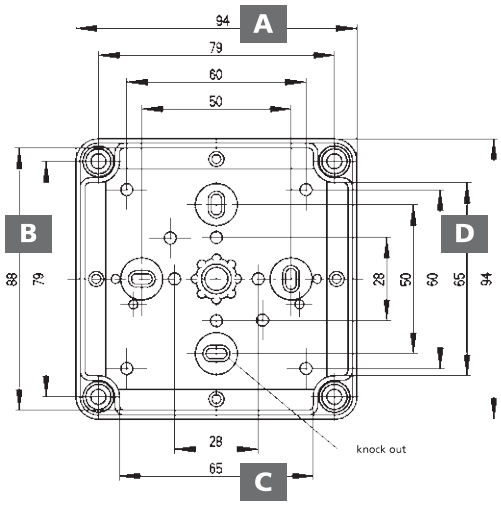

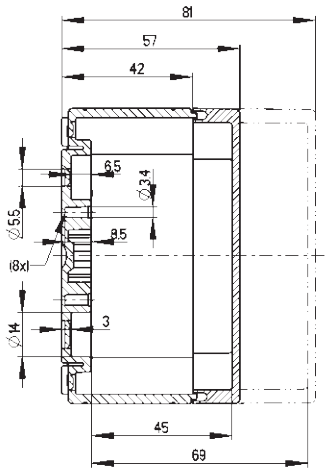

Without knockouts

Maximum possible through openings per box side

M	12	16	20	25	32	40	50
A/C	3	2	2	-	-	-	-
B/D	3	2	2	-	-	-	-

TK 1005 100 x 52 mm

NEW!

Base and cover: **Polycarbonate**, grey, similar to RAL 7035

Enclosure type	Height	Order No.
TK PC 1005-4-m	37	127 480 01
TK PC 1005-4-o	37	120 480 01

NEW!

Base: **Polycarbonate**, grey, similar to RAL 7035
Cover: **Polycarbonate**, transparent

Enclosure type	Height	Order No.
TK PC 1005-4-tm	37	137 480 01
TK PC 1005-4-to	37	130 480 01

TK 1111 110 x 110 mm

Base and cover: **Polystyrene**, grey, similar to RAL 7035

Enclosure type	Height	Order No.
TK PS 1111-7-m	66	105 404 01
TK PS 1111-9-m	90	105 904 01
TK PS 1111-7-o	66	110 404 01
TK PS 1111-9-o	90	110 904 01

Base and cover: **Polycarbonate**, grey, similar to RAL 7035

Enclosure type	Height	Order No.
TK PC 1111-7-m	66	127 404 01
TK PC 1111-9-m	90	127 904 01

Base: **Polystyrene**, grey, similar to RAL 7035
Cover: **Polycarbonate**, transparent

Enclosure type	Height	Order No.
TK PS 1111-7-tm	66	106 004 01
TK PS 1111-9-tm	90	106 504 01
TK PS 1111-7-to	66	111 004 01
TK PS 1111-9-to	90	111 504 01

also available in aluminium, see page 170

Base: **Polycarbonate**, grey, similar to RAL 7035
Cover: **Polycarbonate**, transparent

Enclosure type	Height	Order No.
TK PC 1111-7-tm	66	137 004 01
TK PC 1111-9-tm	90	137 504 01

All dimensions in mm

With knockouts

Metric types
⊘ = M 12/16

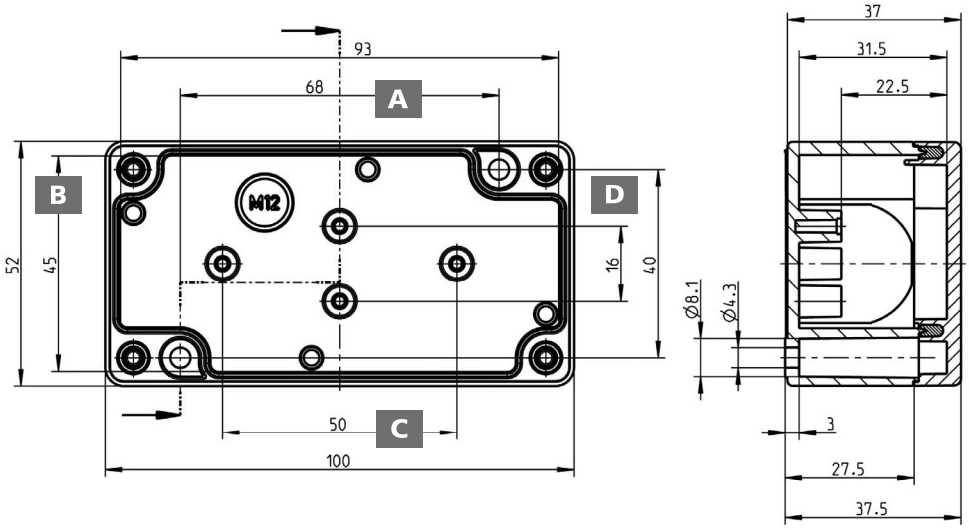

Without knockouts

Maximum possible through openings per box side

M	12	16	20	25	32	40	50
A/C	2	2	-	-	-	-	-
B/D	1	1	-	-	-	-	-

With knockouts

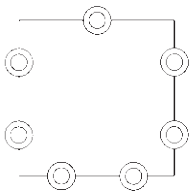

Metric types
⊘ = M 20/25

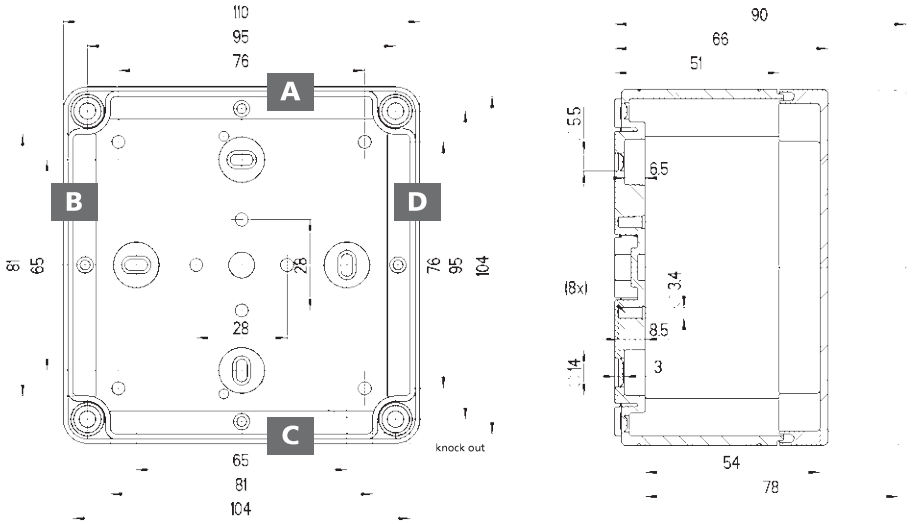

Without knockouts

Maximum possible through openings per box side

M	12	16	20	25	32	40	50
A/C	8	4	2	2	-	-	-
B/D	8	4	2	2	-	-	-

TK 1309 130 x 94 mm

Base and cover: **Polystyrene**, grey, similar to RAL 7035

Enclosure type	Height	Order No.
TK PS 1309-6-m	57	105 409 01
TK PS 1309-8-m	81	105 909 01
TK PS 1309-6-o	57	110 409 01
TK PS 1309-8-o	81	110 909 01

Base and cover: **Polycarbonate**, grey, similar to RAL 7035

Enclosure type	Height	Order No.
TK PC 1309-6-m	57	127 409 01
TK PC 1309-8-m	81	127 909 01

Base: **Polystyrene**, grey, similar to RAL 7035
Cover: **Polycarbonate**, transparent

Enclosure type	Height	Order No.
TK PS 1309-6-tm	57	106 009 01
TK PS 1309-8-tm	81	106 509 01
TK PS 1309-6-to	57	111 009 01
TK PS 1309-8-to	81	111 509 01

Base: **Polycarbonate**, grey, similar to RAL 7035
Cover: **Polycarbonate**, transparent

Enclosure type	Height	Order No.
TK PC 1309-6-tm	57	137 009 01
TK PC 1309-8-tm	81	137 509 01

TK 1313 130 x 130 mm

Base and cover: **Polystyrene**, grey, similar to RAL 7035

Enclosure type	Height	Order No.
TK PS 1313-7-m	75	105 405 01
TK PS 1313-10-m	99	105 905 01
TK PS 1313-7-o	75	110 405 01
TK PS 1313-10-o	99	110 905 01

Base and cover: **Polycarbonate**, grey, similar to RAL 7035

Enclosure type	Height	Order No.
TK PC 1313-7-m	75	127 405 01
TK PC 1313-10-m	99	127 905 01

Base: **Polystyrene**, grey, similar to RAL 7035
Cover: **Polycarbonate**, transparent

Enclosure type	Height	Order No.
TK PS 1313-7-tm	75	106 005 01
TK PS 1313-10-tm	99	106 505 01
TK PS 1313-7-to	75	111 005 01
TK PS 1313-10-to	99	111 505 01

also available in aluminium, see page 170

Base: **Polycarbonate**, grey, similar to RAL 7035
Cover: **Polycarbonate**, transparent

Enclosure type	Height	Order No.
TK PC 1313-7-tm	75	137 005 01
TK PC 1313-10-tm	99	137 505 01

TK 1809 180 x 94 mm

Base and cover: **Polystyrene**, grey, similar to RAL 7035

Enclosure type	Height	Order No.
TK PS 1809-6-m	57	105 410 01
TK PS 1809-8-m	81	105 910 01
TK PS 1809-6-o	57	110 410 01
TK PS 1809-8-o	81	110 910 01

Base and cover: **Polycarbonate**, grey, similar to RAL 7035

Enclosure type	Height	Order No.
TK PC 1809-6-m	57	127 410 01
TK PC 1809-8-m	81	127 910 01

Base: **Polystyrene**, grey, similar to RAL 7035
Cover: **Polycarbonate**, transparent

Enclosure type	Height	Order No.
TK PS 1809-6-tm	57	106 010 01
TK PS 1809-8-tm	81	106 510 01
TK PS 1809-6-to	57	111 010 01
TK PS 1809-8-to	81	111 510 01

Base: **Polycarbonate**, grey, similar to RAL 7035
Cover: **Polycarbonate**, transparent

Enclosure type	Height	Order No.
TK PC 1809-6-tm	57	137 010 01
TK PC 1809-8-tm	81	137 510 01

With knockouts

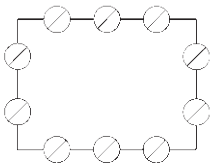

Metric types
⊘ = M 16/20

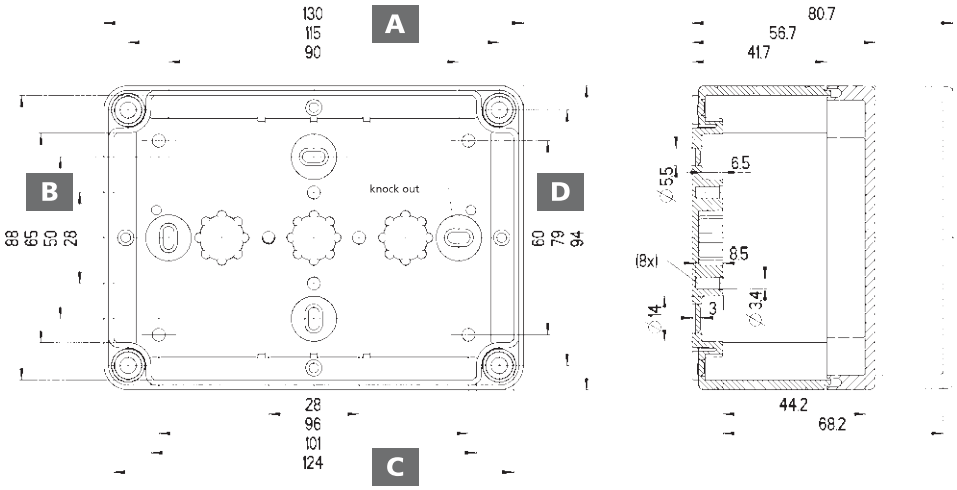

Without knockouts

Maximum possible through openings per box side

M	12	16	20	25	32	40	50
A/C	5	4	3	2	-	-	-
B/D	3	2	2	1	-	-	-

With knockouts

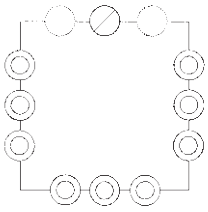

Metric types
= M 20
= M 20/25
= M 25/32

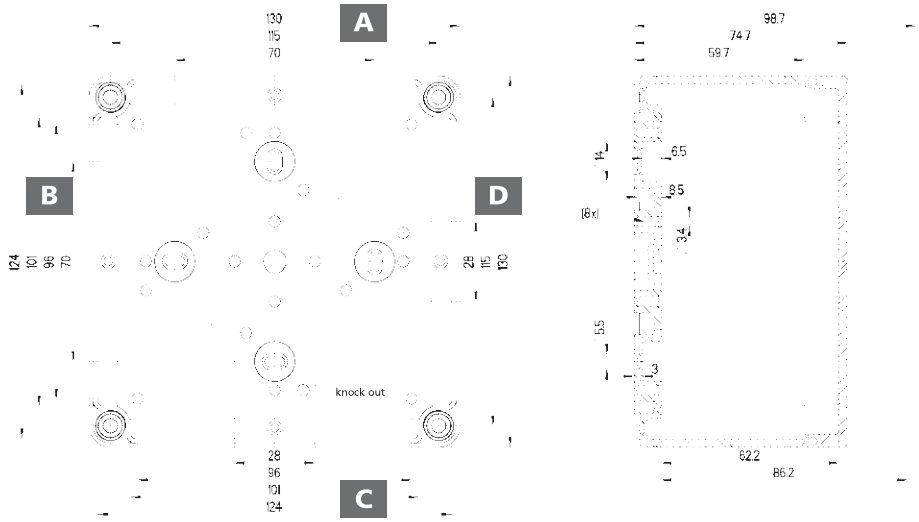

Without knockouts

Maximum possible through openings per box side

M	12	16	20	25	32	40	50
A/C	10	6	3	3	2	-	-
B/D	10	6	3	3	2	-	-

With knockouts

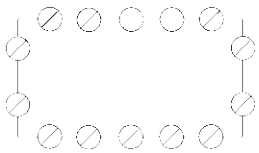

Metric types
⊘ = M 16/20

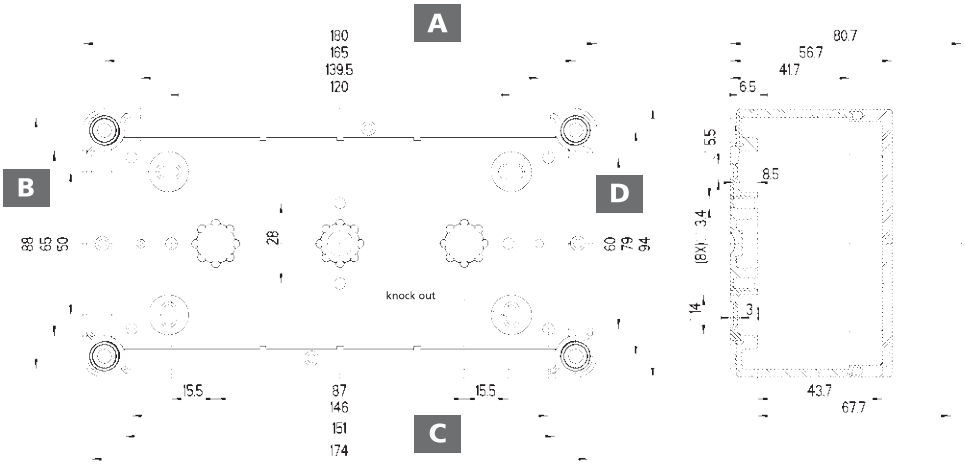

Without knockouts

Maximum possible through openings per box side

M	12	16	20	25	32	40	50
A/C	8	6	5	4	-	-	-
B/D	3	2	2	1	-	-	-

TK 1811 180 x 110 mm

flat

Base and cover: **Polystyrene**, grey, similar to RAL 7035

Enclosure type	Height	Order No.
TK PS 1811-6f-m	63	105 414 01
TK PS 1811-8f-m	84	105 914 01
TK PS 1811-13f-m	137	104 414 01
TK PS 1811-6f-o	63	110 414 01
TK PS 1811-8f-o	84	110 914 01
TK PS 1811-13f-o	137	109 414 01

Base and cover: **Polycarbonate**, grey, similar to RAL 7035

Enclosure type	Height	Order No.
TK PC 1811-6f-m	63	127 414 01
TK PC 1811-8f-m	84	127 914 01
TK PC 1811-13f-m	137	128 414 01

Base: **Polystyrene**, grey, similar to RAL 7035
Cover: **Polycarbonate**, transparent

Enclosure type	Height	Order No.
TK PS 1811-6f-tm	63	106 014 01
TK PS 1811-8f-tm	84	106 514 01
TK PS 1811-13f-tm	137	107 014 01
TK PS 1811-6f-to	63	111 014 01
TK PS 1811-8f-to	84	111 514 01
TK PS 1811-13f-to	137	112 014 01

Base: **Polycarbonate**, grey, similar to RAL 7035
Cover: **Polycarbonate**, transparent

Enclosure type	Height	Order No.
TK PC 1811-6f-tm	63	137 014 01
TK PC 1811-8f-tm	84	137 514 01
TK PC 1811-13f-tm	137	138 014 01

TK 1811 180 x 110 mm

Base and cover: **Polystyrene**, grey, similar to RAL 7035

Enclosure type	Height	Order No.
TK PS 1811-9-m	90	105 406 01
TK PS 1811-11-m	111	105 906 01
TK PS 1811-16-m	165	104 406 01
TK PS 1811-9-o	90	110 406 01
TK PS 1811-11-o	111	110 906 01
TK PS 1811-16-o	165	109 406 01

Base and cover: **Polycarbonate**, grey, similar to RAL 7035

Enclosure type	Height	Order No.
TK PC 1811-9-m	90	127 406 01
TK PC 1811-11-m	111	127 906 01
TK PC 1811-16-m	165	128 406 01

Base: **Polystyrene**, grey, similar to RAL 7035
Cover: **Polycarbonate**, transparent

Enclosure type	Height	Order No.
TK PS 1811-9-tm	90	106 006 01
TK PS 1811-11-tm	111	106 506 01
TK PS 1811-16-tm	165	107 006 01
TK PS 1811-9-to	90	111 006 01
TK PS 1811-11-to	111	111 506 01
TK PS 1811-16-to	165	112 006 01

also available in aluminium, see page 171

Base: **Polycarbonate**, grey, similar to RAL 7035
Cover: **Polycarbonate**, transparent

Enclosure type	Height	Order No.
TK PC 1811-9-tm	90	137 006 01
TK PC 1811-11-tm	111	137 506 01
TK PC 1811-16-tm	165	138 006 01

All dimensions in mm

With knockouts

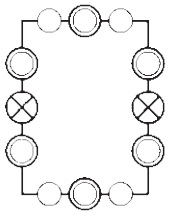

Metric types

◯ = M 12

◯ = M 16/20

⊗ = M 25/32

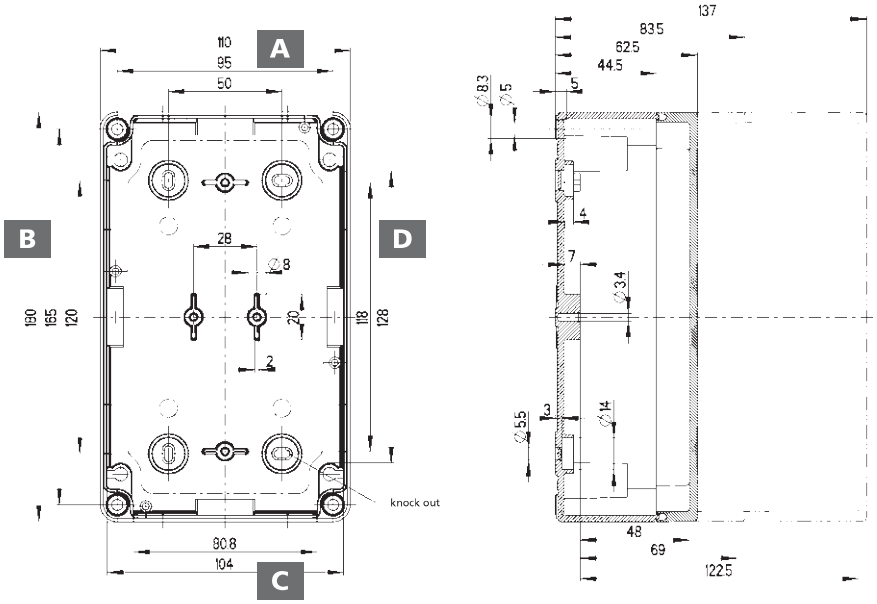

Without knockouts

Maximum possible through openings per box side

M	12	16	20	25	32	40	50
A/C	4	3	2	2	1	-	-
B/D	8	4	4	3	2	-	-

With knockouts

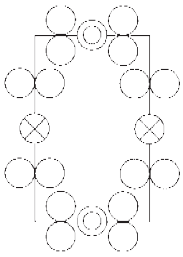

Metric types

◯ = M 20

◯ = M 20/25

⊗ = M 32/40

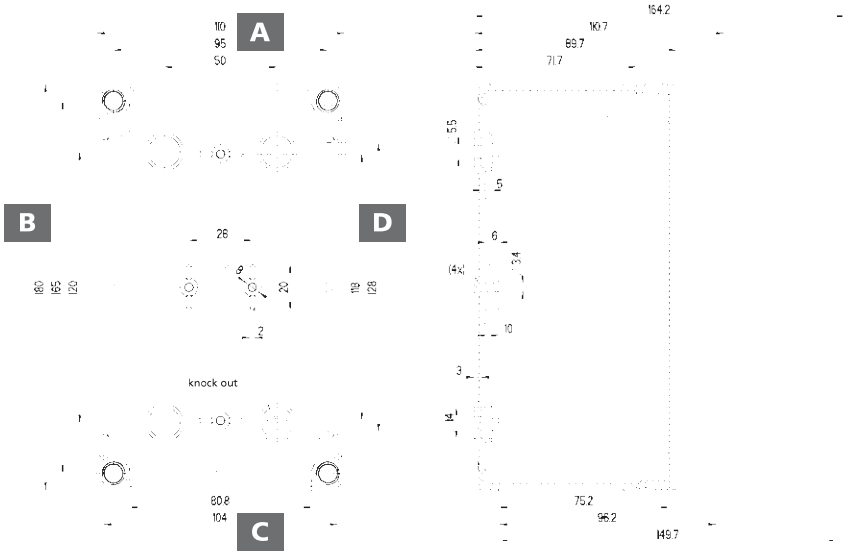

Without knockouts

Maximum possible through openings per box side

M	12	16	20	25	32	40	50
A/C	12	6	5	3	1	1	1
B/D	20	10	8	5	3	2	1

TK 1813 180 x 130 mm

flat

Base and cover: **Polystyrene**, grey, similar to RAL 7035

Enclosure type	Height	Order No.
TK PS 1813-6f-m	63	105 415 01
TK PS 1813-8f-m	84	105 915 01
TK PS 1813-13f-m	137	104 415 01
TK PS 1813-6f-o	63	110 415 01
TK PS 1813-8f-o	84	110 915 01
TK PS 1813-13f-o	137	109 415 01

Base and cover: **Polycarbonate**, grey, similar to RAL 7035

Enclosure type	Height	Order No.
TK PC 1813-8f-m	84	127 915 01
TK PC 1813-6f-m	63	127 415 01
TK PC 1813-13f-m	137	128 415 01

Base: **Polystyrene**, grey, similar to RAL 7035
Cover: **Polycarbonate**, transparent

Enclosure type	Height	Order No.
TK PS 1813-6f-tm	63	106 015 01
TK PS 1813-8f-tm	84	106 515 01
TK PS 1813-13f-tm	137	107 015 01
TK PS 1813-8f-to	84	111 515 01
TK PS 1813-13f-to	137	112 015 01
TK PS 1813-6f-to	63	111 015 01

Base: **Polycarbonate**, grey, similar to RAL 7
Cover: **Polycarbonate**, transparent

Enclosure type	Height	Order No.
TK PC 1813-6f-tm	63	137 015 01
TK PC 1813-13f-tm	137	138 015 01
TK PC 1813-8f-tm	84	137 515 01

TK 1813 180 x 130 mm

Base and cover: **Polystyrene**, grey, similar to RAL 7035

Enclosure type	Height	Order No.
TK PS 1813-9-m	90	105 416 01
TK PS 1813-11-m	111	105 916 01
TK PS 1813-16-m	165	104 416 01
TK PS 1813-9-o	90	110 416 01
TK PS 1813-11-o	111	110 916 01
TK PS 1813-16-o	165	109 416 01

Base and cover: **Polycarbonate**, grey, similar to RAL 7035

Enclosure type	Height	Order No.
TK PC 1813-9-m	90	127 416 01
TK PC 1813-11-m	111	127 916 01
TK PC 1813-16-m	165	128 416 01

Base: **Polystyrene**, grey, similar to RAL 7035
Cover: **Polycarbonate**, transparent

Enclosure type	Height	Order No.
TK PS 1813-9-tm	90	106 016 01
TK PS 1813-11-tm	111	106 516 01
TK PS 1813-16-tm	165	107 016 01
TK PS 1813-9-to	90	111 016 01
TK PS 1813-11-to	111	111 516 01
TK PS 1813-16-to	165	112 016 01

Base: **Polycarbonate**, grey, similar to RAL 7035
Cover: **Polycarbonate**, transparent

Enclosure type	Height	Order No.
TK PC 1813-9-tm	90	137 016 01
TK PC 1813-11-tm	111	137 516 01
TK PC 1813-16-tm	165	138 016 01

With knockouts

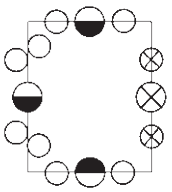

Metric types

- = M 20/25
- = M 25/32
- = M 12/16
- = M 16/20

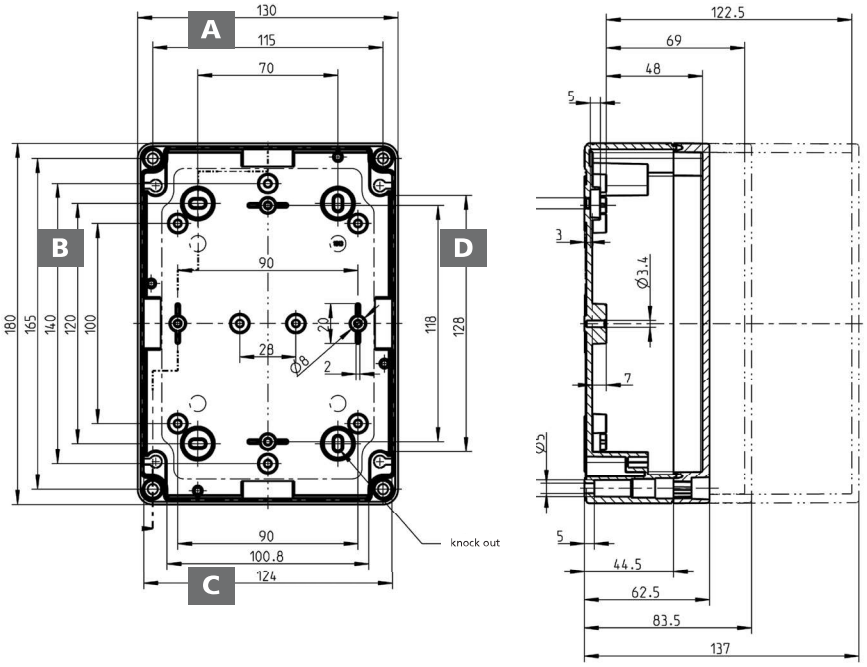

Without knockouts

Maximum possible through openings per box side

M	12	16	20	25	32	40	50
A/C	10	4	3	2	1	-	-
B/D	12	5	4	4	1	-	-

With knockouts

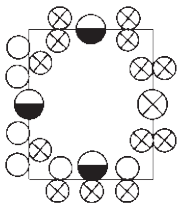

Metric types

- = M 20/25
- = M 25/32
- = M 12/16
- = M 16/20

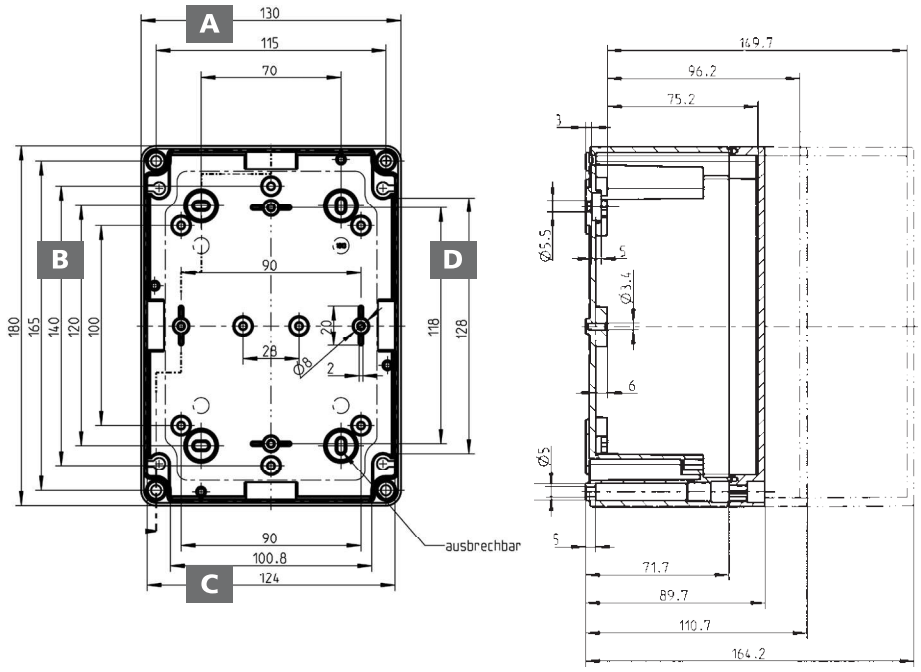

Without knockouts

Maximum possible through openings per box side

M	12	16	20	25	32	40	50
A/C	15	8	6	3	2	1	1
B/D	20	10	8	5	3	2	1

TK 1818 — 182 x 180 mm

flat

Base and cover: **Polystyrene**, grey, similar to RAL 7035

Enclosure type	Height	Order No.
TK PS 1818-6f-m	63	105 413 01
TK PS 1818-8f-m	84	105 913 01
TK PS 1818-13f-m	137	104 413 01
TK PS 1818-6f-o	63	110 413 01
TK PS 1818-8f-o	84	110 913 01
TK PS 1818-13f-o	137	109 413 01

Base and cover: **Polycarbonate**, grey, similar to RAL 7035

Enclosure type	Height	Order No.
TK PC 1818-6f-m	63	127 413 01
TK PC 1818-8-fm	84	127 913 01
TK PC 1818-13f-m	137	128 413 01

Base: **Polystyrene**, grey, similar to RAL 7035
Cover: **Polycarbonate**, transparent

Enclosure type	Height	Order No.
TK PS 1818-6f-tm	63	106 013 01
TK PS 1818-8f-tm	84	106 513 01
TK PS 1818-13f-tm	137	107 013 01
TK PS 1818-6f-to	63	111 013 01
TK PS 1818-8f-to	84	111 513 01
TK PS 1818-13f-to	137	112 013 01

Base: **Polycarbonate**, grey, similar to RAL 7035
Cover: **Polycarbonate**, transparent

Enclosure type	Height	Order No.
TK PC 1818-6f-tm	63	137 013 01
TK PC 1818-8f-tm	84	137 513 01
TK PC 1818-13f-tm	137	138 013 01

TK 1818 — 182 x 180 mm

Base and cover: **Polystyrene**, grey, similar to RAL 7035

Enclosure type	Height	Order No.
TK PS 1818-9-m	90	105 407 01
TK PS 1818-11-m	111	105 907 01
TK PS 1818-16-m	165	104 407 01
TK PS 1818-9-o	90	110 407 01
TK PS 1818-11-o	111	110 907 01
TK PS 1818-16-o	165	109 407 01

Base and cover: **Polycarbonate**, grey, similar to RAL 7035

Enclosure type	Height	Order No.
TK PC 1818-9-m	90	127 407 01
TK PC 1818-11-m	111	127 907 01
TK PC 1818-16-m	165	128 407 01

Base: **Polystyrene**, grey, similar to RAL 7035
Cover: **Polycarbonate**, transparent

Enclosure type	Height	Order No.
TK PS 1818-9-tm	90	106 007 01
TK PS 1818-11-tm	111	106 507 01
TK PS 1818-16-tm	165	107 007 01
TK PS 1818-9-to	90	111 007 01
TK PS 1818-11-to	111	111 507 01
TK PS 1818-16-to	165	112 007 01

also available in aluminium, see page 171

Base: **Polycarbonate**, grey, similar to RAL 7035
Cover: **Polycarbonate**, transparent

Enclosure type	Height	Order No.
TK PC 1818-9-tm	90	137 007 01
TK PC 1818-11-tm	111	137 507 01
TK PC 1818-16-tm	165	138 007 01

With knockouts

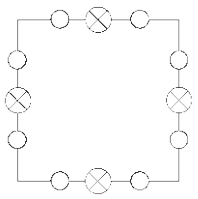

Metric types

◯ = M 16/20

⊗ = M 25/32

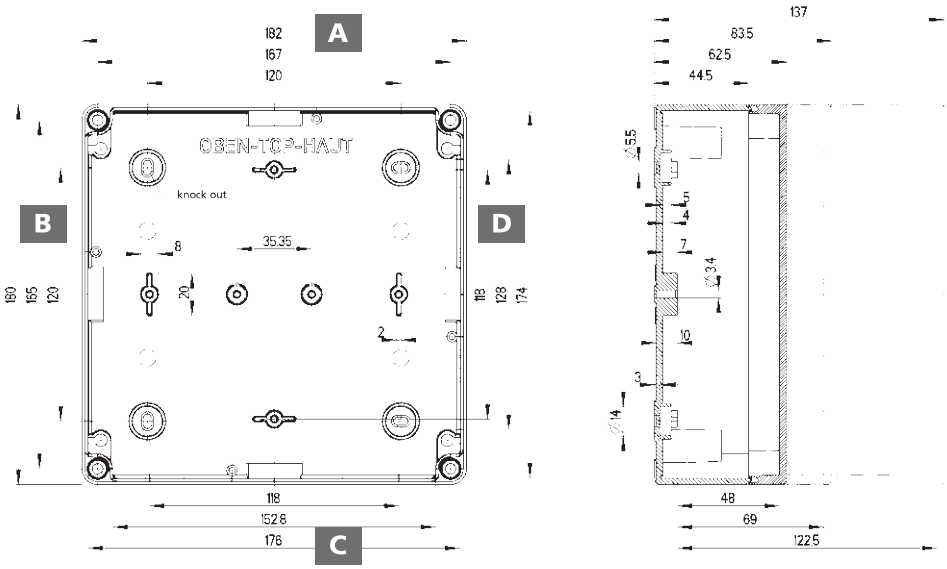

Without knockouts

Maximum possible through openings per box side

M	12	16	20	25	32	40	50
A/C	12	6	4	3	1	-	-
B/D	12	6	4	3	1	-	-

With knockouts

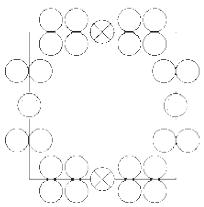

Metric types

◯ = M 20

◯ = M 32/40

⊗ = M 25/32

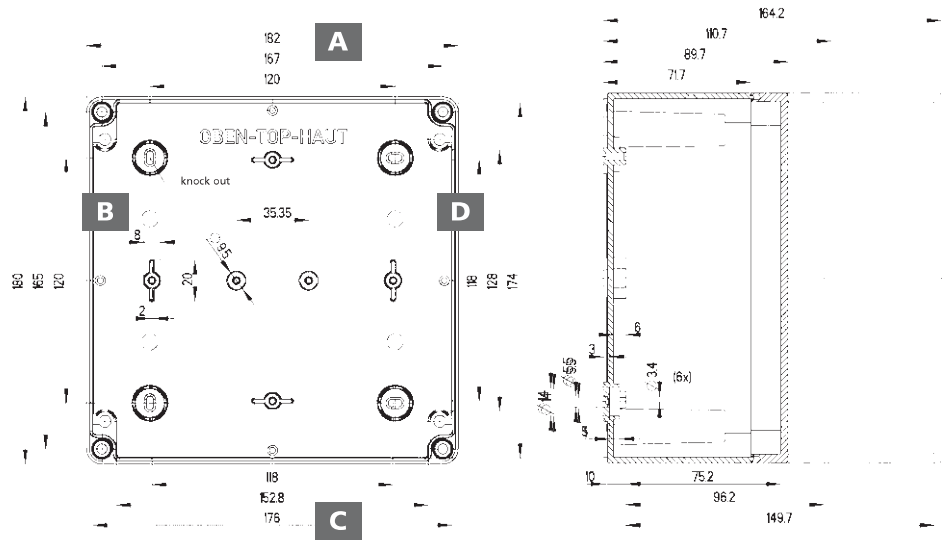

Without knockouts

Maximum possible through openings per box side

M	12	16	20	25	32	40	50
A/C	23	12	10	5	3	3	2
B/D	20	10	8	5	3	2	1

TK 2518 254 x 180 mm

flat

Base and cover: **Polystyrene**, grey, similar to RAL 7035

Enclosure type	Height	Order No.
TK PS 2518-6f-m	63	105 411 01
TK PS 2518-8f-m	84	105 911 01
TK PS 2518-13f-m	137	104 411 01
TK PS 2518-6f-o	63	110 411 01
TK PS 2518-8f-o	84	110 911 01
TK PS 2518-13f-o	137	109 411 01

Base and cover: **Polycarbonate**, grey, similar to RAL 7035

Enclosure type	Height	Order No.
TK PC 2518-6f-m	63	127 411 01
TK PC 2518-8f-m	84	127 911 01
TK PC 2518-13f-m	137	128 411 01

Base: **Polystyrene**, grey, similar to RAL 7035
Cover: **Polycarbonate**, transparent

Enclosure type	Height	Order No.
TK PS 2518-6f-tm	63	106 011 01
TK PS 2518-8f-tm	84	106 511 01
TK PS 2518-13f-tm	137	107 011 01
TK PS 2518-6f-to	63	111 011 01
TK PS 2518-8f-to	84	111 511 01
TK PS 2518-13f-to	137	112 011 01

Base: **Polycarbonate**, grey, similar to RAL 7035
Cover: **Polycarbonate**, transparent

Enclosure type	Height	Order No.
TK PC 2518-6f-tm	63	137 011 01
TK PC 2518-8f-tm	84	137 511 01
TK PC 2518-13f-tm	137	138 011 01

TK 2518 254 x 180 mm

Base and cover: **Polystyrene**, grey, similar to RAL 7035

Enclosure type	Height	Order No.
TK PS 2518-9-m	90	105 408 01
TK PS 2518-11-m	111	105 908 01
TK PS 2518-16-m	165	104 408 01
TK PS 2518-9-o	90	110 408 01
TK PS 2518-11-o	111	110 908 01
TK PS 2518-16-o	165	109 408 01

Base and cover: **Polycarbonate**, grey, similar to RAL 7035

Enclosure type	Height	Order No.
TK PC 2518-9-m	90	127 408 01
TK PC 2518-11-m	111	127 908 01
TK PC 2518-16-m	165	128 408 01

Base: **Polystyrene**, grey, similar to RAL 7035
Cover: **Polycarbonate**, transparent

Enclosure type	Height	Order No.
TK PS 2518-9-tm	90	106 008 01
TK PS 2518-11-tm	111	106 508 01
TK PS 2518-16-tm	165	107 008 01
TK PS 2518-9-to	90	111 008 01
TK PS 2518-11-to	111	111 508 01
TK PS 2518-16-to	165	112 008 01

also available in aluminium, see page 171

Base: **Polycarbonate**, grey, similar to RAL 7035
Cover: **Polycarbonate**, transparent

Enclosure type	Height	Order No.
TK PC 2518-9-tm	90	137 008 01
TK PC 2518-11-tm	111	137 508 01
TK PC 2518-16-tm	165	138 008 01

With knockouts

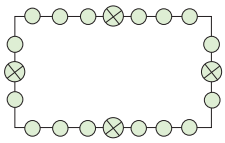

Metric types

◯ = M 16/20

⊗ = M 25/32

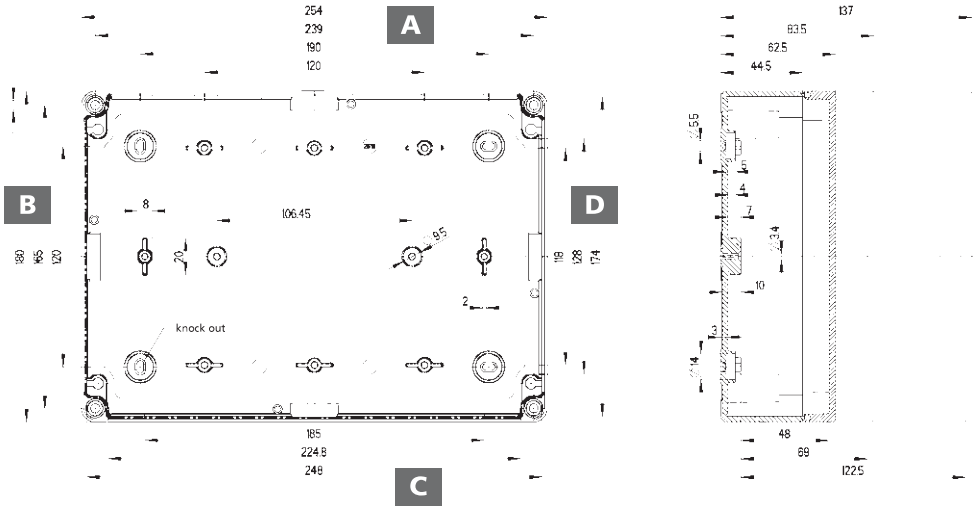

Without knockouts

Maximum possible through openings per box side

M	12	16	20	25	32	40	50
A/C	22	10	7	6	1	-	-
B/D	12	5	4	3	1	-	-

With knockouts

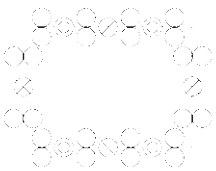

Metric types

◯ = M 20

◯ = M 25/32

⊗ = M 32/40

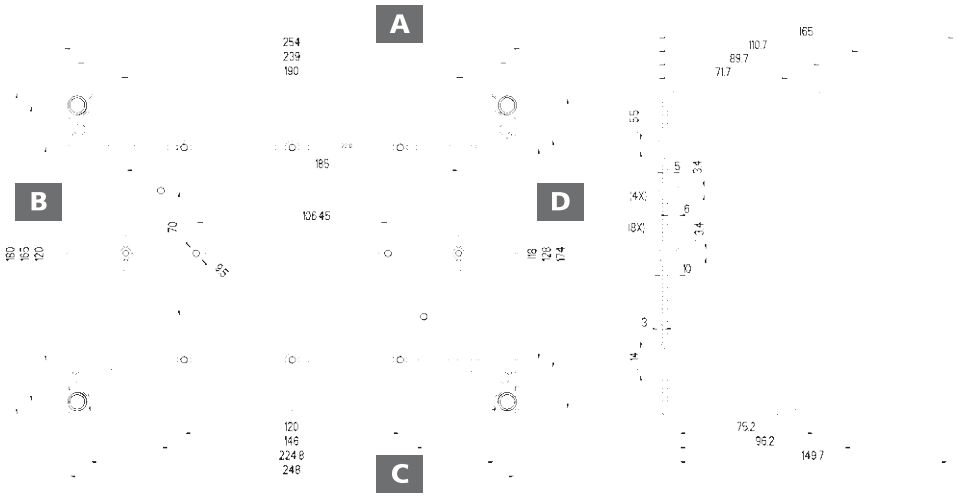

Without knockouts

Maximum possible through openings per box side

M	12	16	20	25	32	40	50
A/C	33	18	14	11	5	4	3
B/D	20	10	8	5	3	2	1

Base and cover: **Polystyrene**, grey, similar to RAL 7035

Enclosure type	Height	Order No.
TK PS 3625-11-m	111	105 412 01
TK PS 3625-16-m	165	105 912 01
TK PS 3625-11-o	111	110 412 01
TK PS 3625-16-o	165	110 912 01

Base and cover: **Polycarbonate**, grey, similar to RAL 7035

Enclosure type	Height	Order No.
TK PC 3625-11-m	111	127 412 01
TK PC 3625-16-m	165	127 912 01

Base: **Polystyrene**, grey, similar to RAL 7035
Cover: **Polycarbonate**, transparent

Enclosure type	Height	Order No.
TK PS 3625-11-tm	111	106 012 01
TK PS 3625-16-tm	165	106 512 01
TK PS 3625-11-to	111	111 012 01
TK PS 3625-16-to	165	111 512 01

also available in aluminium, see page 171

Base: **Polycarbonate**, grey, similar to RAL 7035
Cover: **Polycarbonate**, transparent

Enclosure type	Height	Order No.
TK PC 3625-11-tm	111	137 012 01
TK PC 3625-16-tm	165	137 512 01

With knockouts

Metric types

◯ = M 20

◯ = M 25/32

⊗ = M 32/40

Without knockouts

Maximum possible through openings per box side

M	12	16	20	25	32	40	50
A/C	42	24	16	14	6	4	4
B/D	33	18	14	11	5	4	3

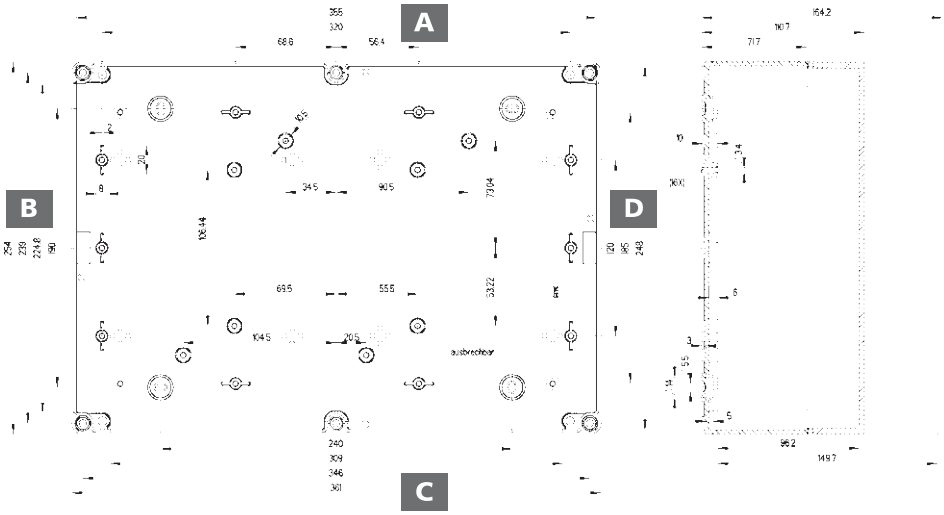

All dimensions in mm